SENSE 403 BE

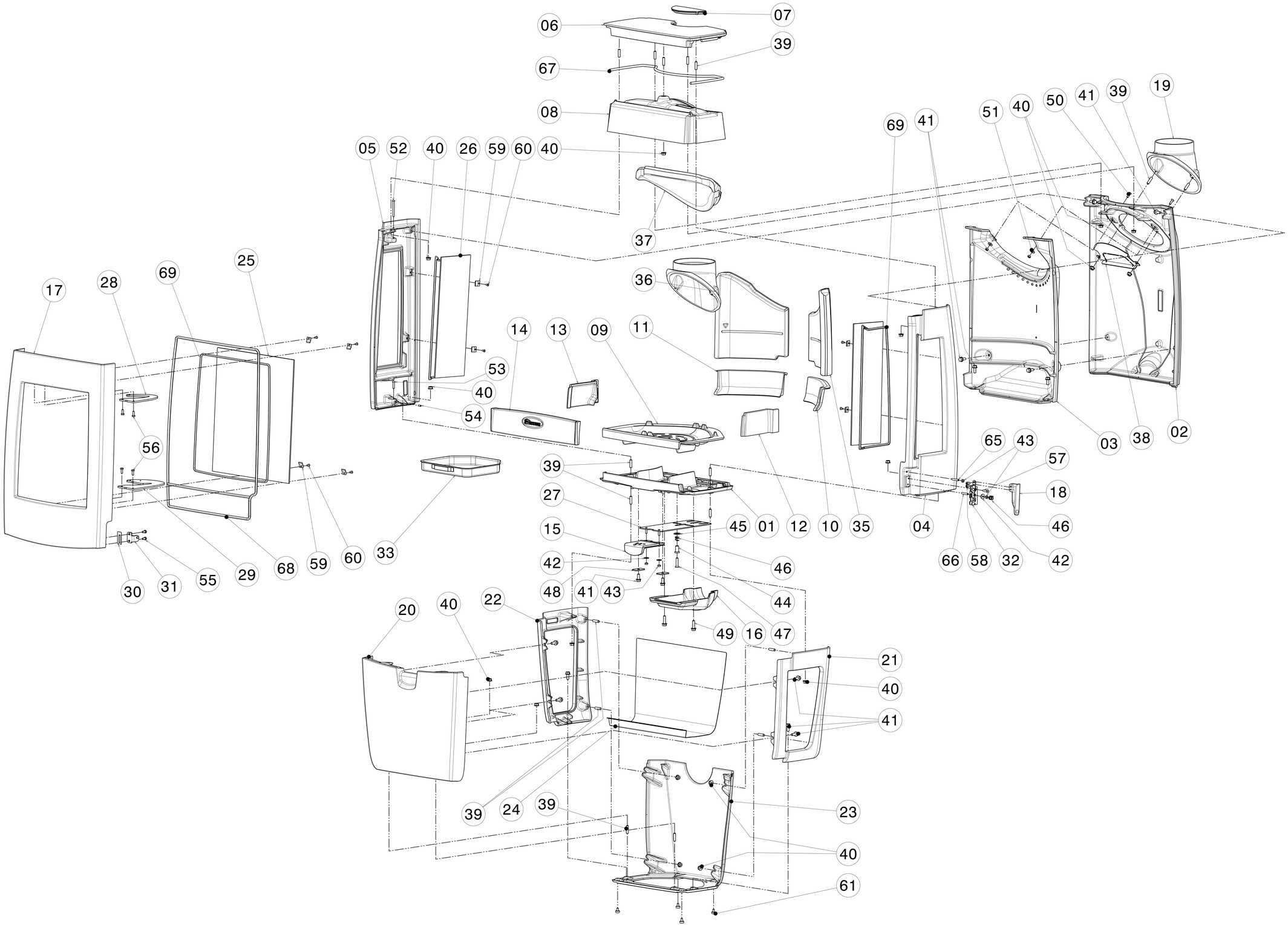
06
07
39
67
08
05
52
40
26
59
60
40
37
69
41
51
40
50
41
39
19
17
28
69
25
36
14
13
09
11
53
40
54
56
39
27
15
42
48
41
43
45
01
12
10
35
04
65
43
57
18
46
66
58
32
42
03
38
02
33
59
60
68
29
55
31
30
46
44
49
16
47
20
40
22
21
40
41
39
24
39
23
40
61

7	70.15365.000	DEKSEL TOPPLAAT SENSE ZWART	COUVERCLE PLAQUE SUPERIEURE SENSE	COVER TOP PLATE SENSE	DECKEL TOP PLATTE SENSE
9	70.66549.000	STOOKBODEM SENSE 300-400	PLAQUE DE SOLE SENSE 300-400	FIRE PLATE BOTTOM SENSE 300-400	FEUER BODEN SENSE 300-400
10	70.77444.000	VUURKORF LINKS ACHTER SENSE300-400	GARDE-BUCHES GAUCHE ARRIERE SENSE300-400	LOG RETAINER LEFT BACK SENSE300-400	STEHROST LINKS HINTEN SENSE300-400
11	70.77443.000	VUURKORF RECHTS ACHTER SENSE 300-400	GARDE-BUCHES DROITE SENSE300-400	LOG RETAINER RIGHT SENSE300-400	STEHROST RECHTS SENSE300-400
12	70.77442.021	VUURKORF RECHTS ZWART SENSE 300-400	GARDE-BUCHES DROITE NOIR SENSE300-400	LOG RETAINER RIGHT BLACK SENSE300-400	STEHROST RECHTS SCHWARZ SENSE300-400
13	70.77441.021	VUURKORF LINKS ZWART SENSE 300-400	GARDE-BUCHES GAUCHE NOIR SENSE300-400	LOG RETAINER LEFT BLACK SENSE300-400	STEHROST LINKS SCHWARZ SENSE300-400
14	70.77440.021	VUURKORF ZWART SENSE300-400	GARDE-BUCHES NOIR SENSE300-400	LOG RETAINER BLACK SENSE300-400	STEHROST SCHWARZ SENSE300-400
19	70.00391.021	AANSLUITKRAAG ZWART SENSE	BUSELOT	COLLAR	STUTZE
25	70.26377.000	FRONTGLAS 470X420 SENSE 300-400	vitre ceramique sense 300-400	ceramic glass sense 300-400	glasscheibe sense 300-400
26	70.26378.000	ZIJGLAS 466X160 SENSE 300-400	vitre ceramique sense 300-400	ceramic glass SENSE 300-400	glasscheibe SENSE 300-400
27	72.38028.000	LUCHTSCHUIF SENSE300-400	REGLETTE D'AIR SENSE300-400	DRAFT CONTROL SENSE300-400	LUFT SCHIEBER SENSE300-400
31	70.64314.021	SLUITNOK SLAMLOCK SENSE SAM.	FERMETURE SENSE	LOCKING SENSE	VERSCHUSS SENSE
32	70.64315.000	SLUITING SENSE	FERMETURE SENSE	LOCKING DOOR SENSE	VERSCHLUSS TUR SENSE
33	70.05216.000	ASL.1806 ASLADE	ASL.1806 CENDRIER	ASL.1806 ASHTRAY	ASL.1806 ASCHEKASTEN
35	70.77548.000	VERMICULIET ACHTER RECHTS SENSE 300-400	VERMICULITE ARRIERE DROITE SENSE300-400	VERMICULITE BACK RIGHT SENSE300-400	VERMICULIET HINTEN RECHTS SENSE300-400
36	70.77547.000	VERMICULIET ACHTER LINKS SENSE 300-400	VERMICULITE ARRIERE GAUCHE SENSE300-400	VERMICULITE BACK LEFT SENSE300-400	VERMICULIET HINTEN LINKS SENSE300-400
37	70.76188.000	VLAMPLAAT VERMICULIET SENSE 300-400	DEFLECTEUR VERMICULITE SENSE 300-400	BAFFLE PLATE VERMICULITE SENSE300-400	FLAMLEITPLATTE VERMICULIET SENSE 300-400
39	70.19507.000	10 st TAPEIND M8X20	10 p GOUJON DIN 939 M8X20	10 pc STUD DIN 939 M8X20	10 st STIFTSCHRAUBE DIN 939 M8X20
40	70.22203.041	10 st D6923 M8 ZESKANTFLENSMOER GEZW#	10 p ECROU DIN 6923 M8 NOIR	10 pc NUT DIN 6923 M8 BLACK	10 st MUTTER DIN 6923 M8
41	70.22201.041	10 st D6921 M8X20 ZESKANTFLENSBOUT GEZW	10 p BOULON DIN 6921 M8x20 NOIR	10 pc BOLT DIN 6921 M8x20 BLACK	10 st BOLZEN DIN 6921 M8x20 SCHWARZ
42	70.18701.000	10 st D9021A Ø6XØ18 SLUITRING	10 P RONDELLE DIN 9021A Ø6	10 PC WASHER DIN 9021A Ø6XØ18	10 st UNTERLEGSCHEIBE DIN 9021A Ø6XØ18
43	70.19410.000	10 st D934 M6 ZESKANTMOEREN	10 p ECROU DIN 934 M6	10 pc NUT DIN 934 M6	10 st MUTTER DIN 934 M6
46	70.72644.000	DRUKVEER RVS Ø18.2XØ1.25X40.5	RESSORT RVS Ø18.2XØ1.25X40.5	SPRING RVS Ø18.2XØ1.25X40.5	FEDER RVS Ø18.2XØ1.25X40.5
47	70.18615.000	10 st D7991 M8X35 VERZ.SCHR.BIZK VOL DRAAD	10 p VIS DIN 7991 M8X35	10 pc SCREW DIN 7991 M8X35	10 st SCHRAUBE DIN 7991 M8X35
49	70.22202.041	10 ST D6921 M8X30 ZESKANTFLENSBOUT GEZW.	10 p BOULON DIN 6921 M8x30 NOIR	10 pc BOLT DIN 6921 M8x30 BLACK	10 st BOLZEN DIN 6921 M8x30 SCHWARZ
50	70.18602.041	10 st D7991 M6X20 VERZ.SCHR.BIZK GEZW VOLDR	10 p VIS DIN 7991 M6x20 NOIR	10 pc SCREW DIN 7991 M6x20 BLACK	10 st SCREW DIN 7991 M6x20 BLACK
51	70.17901.000	10 st D7349 Ø6,4XØ17X3 SLUITRING DIK	10 p ROND. D7349 Ø6,4xØ17x3	10 pc WASHER D7349 Ø6,4xØ17x3	10 st UNTERL.SCH.D7349 Ø6,4xØ17x3
52	70.17516.000	10 ST Ø5.9x35 RVS BOLKOPKLINKNAGEL - 17505.0	10 P RIVET Ø6X35 - 17505.0	10 PC RIVET Ø6X35 - 17505.0	10 ST RIVER Ø6X35 - 17505.0
53	70.17516.000	10 ST Ø5.9x35 RVS BOLKOPKLINKNAGEL - 17505.0	10 P RIVET Ø6X35 - 17505.0	10 PC RIVET Ø6X35 - 17505.0	10 ST RIVER Ø6X35 - 17505.0
54	70.21743.000	10 st M5X12 STELSCHR.BI ZESK	10 p VIS DIN 916 M5X5 NOIR	10 pc SCREW DIN 916 M5X12	10 st GEWINDESTIFT DIN 916 M5X12
55	70.19304.000	10 st D933 M6X16 ZESKANTTAPBOUT	10 p BOULON DIN 933 M6x16	10 pc BOLT DIN 933 M6x16	10 st BOLZEN DIN 933 M6x16
56	70.19304.000	10 st D933 M6X16 ZESKANTTAPBOUT	10 p BOULON DIN 933 M6x16	10 pc BOLT DIN 933 M6x16	10 st BOLZEN DIN 933 M6x16
57	70.19502.000	10 st D939 M6X20 TAPEINDEN	10 p GOUJON DIN 939 M6x20	10 pc STUD DIN 939 M6x20	10 st STIFTSCHRAUBE DIN 939 M6x20
58	70.18912.000	10 st D912 M6X10 CIL.KOPSCHR.B	10 p VIS A TETE	10 pc SOCKET HEAD SCREW DIN912 M6X10	10 st SCHRAUBEN MIT INNENSECHKANT
59	70.26101.041	4ST SET GLASBEV; 20X20MM	4PC SET FIXATION VITRE 20X20	4PC SET GLASS RETAINER 20X20	4ST SET GLAS BEHÄLTER 20X20
60	70.19801.041	10 st M5X10 PLATV.SCHR.KK ZWART 4.6	10 p VIS DIN 965 M5x10 NOIR	10 pc SCREW DIN 965 M5x10 BLACK	10 st SCHRAUBE DIN 965 M5x10 SCHWARZ
61	70.79889.000	Z839 : 4 X STELVOET 15M6X20 Z. KARTELRAND	Z389 : 4 x PIED REGLABLE	Z389 : 4 x ADJUSTABLE LEG	Z839 : 4 x STELFUSS
62	70.18912.000	10 st D912 M6X10 CIL.KOPSCHR.B	10 p VIS A TETE	10 pc SOCKET HEAD SCREW DIN912 M6X10	10 st SCHRAUBEN MIT INNENSECHKANT
63	70.19801.041	10 st M5X10 PLATV.SCHR.KK ZWART 4.6	10 p VIS DIN 965 M5x10 NOIR	10 pc SCREW DIN 965 M5x10 BLACK	10 st SCHRAUBE DIN 965 M5x10 SCHWARZ
64	70.79889.000	Z839 : 4 X STELVOET 15M6X20 Z. KARTELRAND	Z389 : 4 x PIED REGLABLE	Z389 : 4 x ADJUSTABLE LEG	Z839 : 4 x STELFUSS
65	70.21709.000	10 st D916 M6X35 STELSCH.BI ZESK	10 p VIS DIN916 M6x35	10 pc SCREW DIN 916 M6x35	10 st GEWINDESTIFTE DIN 916 M6x35
66	70.19502.000	10 st D939 M6X20 TAPEINDEN	10 p GOUJON DIN 939 M6x20	10 pc STUD DIN 939 M6x20	10 st STIFTSCHRAUBE DIN 939 M6x20
67	70.79869.000	SERVICE KIT 6.5M GLASVEZELKOORD 8MM - SK	SERVICE KIT 6.5M JOINT FIBRE CERAMIQUE 8MM - SK	SERVICE KIT 6.5M GLASS FIBER ROPE 8 MM - SK	SERVICE KIT 6.5M GLASFABER SCHNUR 8MM - SK
68	70.79869.000	SERVICE KIT 6.5M GLASVEZELKOORD 8MM - SK	SERVICE KIT 6.5M JOINT FIBRE CERAMIQUE 8MM - SK	SERVICE KIT 6.5M GLASS FIBER ROPE 8 MM - SK	SERVICE KIT 6.5M GLASFABER SCHNUR 8MM - SK
69	70.79902.000	Z334 GL.VEZELKOORD Ø6 Z.KL.L=1.1M	Z334 JOINT FIBRE 10X3MM ADHÉSIF	Z334 GLASS FIBER ROPE Ø6 Z.KL.L=1.1M	Z334 GLASFASER SCHNUR Ø6 Z.KL.L=1.1M